Thermal Oxidation of Sewage Solids

White Paper
April 2002

Water Environment Federation
Residuals and Biosolids Committee
Bioenergy Technology Subcommittee

Ron Sieger, CH2M HILL, Chair
Peter Brady, Alpine Technology, Vice Chair

John Donovan, CDM, Primary Reviewer
Tim Shea, CH2M HILL, Primary Reviewer

Thermal Oxidation Technology Team

James Welp, Black & Veatch, Chair (Principal Author)
Lee Lundberg, USFilter/E&C, Vice Chair
John Borghesi, CH2M HILL
Amit Chattopadhyay, Malcolm Pirnie
Brian Copeland, Von Roll
John D'Acierno, TECHNIP
Ky Dangtran, Ondeo Degremont
Dirk Eeraerts, Seghers
Brian Kent, Duffin Creek WWTP
John Kiviniemi, MSD of Buncombe Co.
Mike Lewis, City of Los Angeles
William Lill, Industrial Furnace
Marc Bacon, Fabgroups
Tom McGowan, TMTS
Ben Wester, Malcolm Pirnie
William Mansfield, Industrial Furnace
Mike Mayer, USFilter-Zimpro
Tom McAdams, Envirocare
Andy Nelson, York River WWTP
Richard O'Conor, Minergy
Jim Rowan, Black & Veatch
Heinz Ropers, Von Roll
Gary Storms, Praxair

White Paper on Thermal Oxidation

This paper provides a status review of thermal oxidation as a biosolids processing technology. Thermal oxidation is defined as the combustion of the organic solids in wastewater solids to form carbon dioxide and water. The remaining solids are an inert material commonly called ash. There are two common types of thermal oxidation technologies: fluid bed and multiple hearth.

Process Summary

Although there are many technologies to oxidize material, the most typical for sewage solids are fluid bed and multiple hearth technologies, and each is described below.

Fluid Bed Technology

The fluid bed thermal oxidizer is a vertical refractory-lined steel cylinder consisting of a windbox section into which combustion air is introduced, a bed section where the solids are fluidized along with sand, and a freeboard section where combustion is completed. The windbox and fluidized bed section are separated by a refractory arch or metal plate. The windbox type designation is determined by the temperature of the combustion air (less than 200°F for cold windbox, 600°F to 900°F for a warm windbox, and above 1,000^{o}F for hot windbox). Tuyeres are used to distribute air into the bed from the windbox below. Solids and auxiliary fuel are typically injected directly into the bed. The combustion begins in the bed and completes in the freeboard. The exhaust gas (including ash) passes through energy recovery facilities before it is treated in air pollution control equipment. Ash is normally removed in a slurry form via the wet scrubbing system, although some designs have a dry ash removal system upstream of the scrubbers. The residence time of a solids particle is 5 to 60 seconds. A schematic of a typical fluid bed is presented in Figure 1.

Figure 1. Fluid Bed Process Schematic

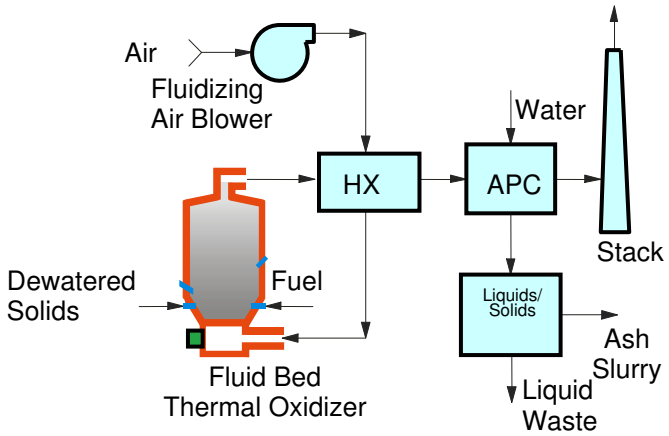

Multiple Hearth Technology

The multiple hearth thermal oxidizer consists of a vertical refractory-lined cylinder with a series of horizontal refractory brick hearths, stacked one atop the other. A rotating center shaft extends the height of the unit and supports the rabble arms above each hearth. The rabble arms contain teeth or plows which rake the solids across the hearth in a pattern to facilitate drying and burning. Solids are typically fed at the top hearth and are plowed to an inner drophole or outer dropholes on successive hearths. Most of the ash is discharged from the bottom hearth and may be handled in dry form or slurried and handled in wet form. The residence time of a solids particle is 40 to 60 minutes. A schematic of a multiple hearth is presented as Figure 2.

Figure 2. Multiple Hearth Process Schematic

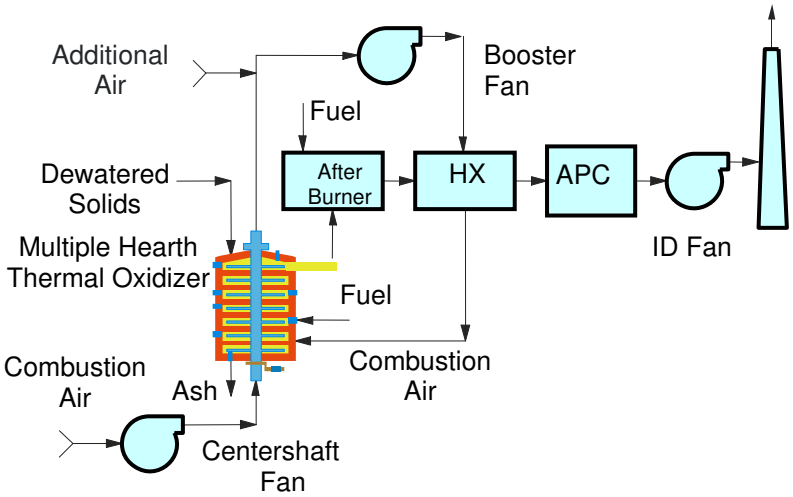

The multiple hearth is separated into three zones. The top hearths comprise the drying zone where water is evaporated. The middle hearths comprise the combustion zone where the

volatile solids are oxidized and the fixed carbon combustion is completed. The bottom hearths comprise the cooling zone where the ash is cooled by incoming combustion air.

The temperature in the combustion zone, typically 1,400°F to 1,600°F, is the same for both the fluid bed and multiple hearth systems. The major difference is that, in the fluid bed, the solids are fed directly into the high temperature combustion zone where the turbulence allows for good fuel-air mixing. A multiple hearth is a multi-stage, countercurrent process, whereas a fluid bed is a co-current process, with essentially only two stages (bed zone and freeboard zone). Some multiple hearths have been modified to include afterburner chambers in the form of "zero" hearths (hearths above the feed hearth) or separate chambers to improve their combustion efficiency. Another important difference for the fluid bed is the ability to better control combustion air. Fluid bed systems typically need only 30% to 50% excess air as compared to 50% 150% for multiple hearth systems. The combination of improved combustion (time, temperature, and turbulence) and improved combustion air control results in lower carbon monoxide (CO), total hydrocarbons (THC), and nitrogen oxide (NO_x) emissions from fluid bed systems.

Nearly all new thermal oxidation installations in the last 20 years have used fluid bed technology. Many agencies with multiple hearths have required retrofits and operational changes to comply with more stringent emissions. These modifications have included afterburner chambers, exhaust gas recirculation, add-on thermal oxidizers and improved scrubbers. Other facilities have increased afterburner operating temperatures to reduce "yellow plume" emissions or cyanide concentrations in the scrubber water. Both of these emissions are signs of incomplete combustion. In terms of sheer numbers, though, there are still many more operating multiple hearth furnaces (197) than fluid bed furnaces (55) (National Biosolids Partnership).

Thermal Oxidation as a Biosolids Management Option

There are about 150 municipalities in the United States using thermal oxidation as a biosolids management option. Every biosolids management option has some benefits and limitations. A listing of the advantages and disadvantages of thermal oxidation are listed in Table 1.

Table 1. Thermal Oxidation Advantages and Disadvantages

Advantages	Disadvantages
Complete stabilization process destroying all volatile solids and pathogens. Large volume and mass reduction lowers truck traffic as compared with other biosolids handling alternatives. Low life cycle cost for most medium and large facilities. Low potential for onsite or offsite odors.	High initial capital costs. Poor public image and acceptance due to misinformation and perceptions. May not be appropriate for non-continuous operation (although fluid bed systems are commonly operated 24 hours per day, 4-5 days per week). Permitting is more complex than for other

Requires small land area and can operate continuously in all weather conditions. Lower auxiliary fuel requirements than other biosolids handling alternatives. Strictest monitoring and reporting requirements ensure public of proper operation. Better ability to handle grease and scum. Pre-stabilization process not required.	biosolids alternatives. Not perceived as "green" process. Ash reuse programs have not been well developed.

To illustrate the hauling economy and convenience of thermal biosolids processing options, one truckload of ash is equivalent to; 3 truckloads of dried product, ten to twelve truckloads of dewatered cake, and sixteen truckloads of composted material (Heitz).

Thermal Oxidation Issues

There are many issues around thermal oxidation. Several of these are presented below.

Air Emissions

The public perceives that air emissions are greater with thermal oxidation than other biosolids options. This perception generally focuses on stack emissions and does not consider off-site emissions associated with trucking for other options. The basis of this perception is the older units that were problems 20 to 30 years ago. In practice, most utilities have upgraded their emission control equipment and are not experiencing chronic air pollution problems. A modern thermal facility should have emission controls and process controls that leave no significant pollutant emissions and no visible stack emissions.

Commonly regulated pollutants include particulate matter (PM); total hydrocarbons (THC); carbon monoxide (CO); nitrogen oxides (NO_x); sulfur oxides (SO_x); and metals including arsenic, cadmium, chromium, lead, nickel, beryllium, and mercury.

The continuous emission monitors (CEMs) required by the US EPA Part 503 regulations provided operators with something they were lacking: immediate feedback. In most cases, this has allowed the operators to better control the thermal oxidation system and comply with emission requirements.

Another factor that greatly reduces emissions is the industrial pretreatment program. The high concentrations of pollutants that could contaminate wastewater solids have been controlled at the source and eliminated from sewers. If the pollutants are not in the wastewater solids, they will not be in the emissions.

Energy Use

The auxiliary energy requirements for thermal oxidation are typically less than for other thermal processes because of the bioenergy value of the solids. Wastewater solids normally

have a bioenergy value of 10,000 to 12,000 BTUs per pound of volatile solids. State of the art thermal oxidation systems are designed to recover energy in excess of what is needed for the oxidation process. Improvements in mechanical dewatering and exhaust heat recovery devices over the last decade have made autogenous (without supplemental fuel) combustion not only possible, but the expectation. Energy from the flue gas can be recovered as heated air, gas, steam, water, or oil, using heat exchangers or waste heat boilers. The energy recovered can then be used as a thermal product or converted to electricity in steam driven equipment.

Whether autogenous combustion is achieved depends on the total dry solids, the volatile solids content, the volatile solids heating value, and the amount of heat recovery possible (temperature of fluid heated). One of the inherent advantages of a fluid bed is that it can operate with high-temperature (1,000°F to 1,200°F) combustion air. Multiple hearths are typically limited to combustion air inlet temperatures of 400°F or less.

Typical fluid bed system energy use for varying total solids content is presented in Figure 3. The figure indicates that for feed solids at 75% volatile solids, autogenous combustion occurs at 26% to 28% total solids using hot windbox equipment, matching the performance of current dewatering equipment. Thus the design and operation of an autogenous thermal oxidation system is capable with available equipment and technology.

Figure 3. Fluid bed Fuel Use versus Feed Solids

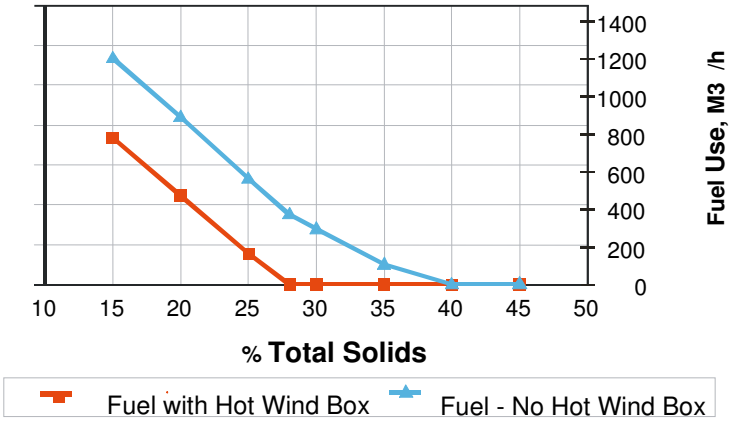

About 50% of the total energy contained in the exhaust gases of fluid bed (or multiple hearth) systems is available for heat recovery. The amount of bioenergy required to preheat the combustion air to 1,000°F to 1,200°F requires about 25% of the total energy in the fluid bed exhaust gas. Flue gas temperatures exiting a high temperature combustion air heat exchanger are on the order of 1,000°F in a fluid bed system, suggesting that additional energy recovery could be achieved. Another 25% of the total energy in the fluid bed exhaust gas can be recovered from heat exchange between 1,000°F and 400°F. It is usually not practical to cool the exhaust gases below 400°F to recover energy. The remaining 50% of

available thermal energy exists as latent heat of vaporization of water in the exhaust stream. This has not typically been recovered because of the need for specialized equipment.

The inclusion of extensive energy recovery and utilization facilities in thermal oxidation systems should be viewed positively from the public perception viewpoint as it represents a form of "green" energy. For example, the inclusion of a steam boiler and turbine/generator system on a 50 dry tonne (metric ton) per day fluid bed system could result in the generation of 1.25 to 2.25 megawatts of power (depending upon how much of the flue gas energy is required for air preheat). This recovered energy may be utilized to support the thermal oxidation process itself (only about 0.4 to 0.7 megawatts) or supplant other plant energy needs. Thus, a thermal oxidation process with only moderately aggressive heat recovery can be a net energy exporter to the rest of the wastewater treatment facility. The inclusion of a steam system adds complexity to the overall facility in two ways. First, the temperatures in a waste heat boiler may be favorable for dioxin formation, requiring additional air pollution control. Second, the startup and shutdown procedures become more detailed. A site specific cost/benefit analysis for a steam system is recommended before proceeding.

Relative Cost

Designers are always looking for ways to compare thermal oxidation process costs with other processes. It is often difficult to get a good "apples to apples" comparison. In an attempt to give broad guidance on costs, unit costs per dry tonne of material processed are included here. The costs will vary significantly depending on the size of the facility and the available infrastructure (new structure or existing).

Capital costs for thermal oxidation systems are largely site-specific; however, it is reasonable to assume that a modern thermal oxidation system could be constructed for a capital cost of $175,000 to $250,000 per dry tonne/day of system capacity.

Auxiliary fuel costs, discussed earlier, can vary broadly and depend upon a myriad of factors -- primarily exhaust temperature, excess air level, and the thermodynamic characteristics of the solids. Generally speaking, fuel requirements for a fluid bed are expected to range from 1 to 6 MMBTU/dry tonne, and fuel requirements for a multiple hearths are expected to range from 4 to 16 MMBTU/dry tonne. For a fluid bed, most of the fuel costs are for startups and hot standby. Electrical power requirements are about twice as high for a fluid bed (240 to 400 KWH/dry tonne) as they are for a multiple hearth (130 to 200 KWH/dry tonne). Other annual costs include maintenance, chemicals for wet scrubbing (if any), ash disposal, and other miscellaneous costs. These are also site-specific; however, it would not be unreasonable to expect a total of $40 to $60 per dry tonne for these cost items, regardless of technology.

The potential costs savings and avoided costs attributable to aggressive energy recovery (i.e., generated power, steam for plant heating, etc.) can be substantial. Using the illustration given under the discussion of energy recovery, the value of power generated from steam produced in the waste heat recovery system could reduce the operating costs by $30 to $50 per dry tonne. The additional energy recovery system also increases the capital and operating costs (qualified boiler operator, boiler feed water treatment, condensers, etc.) and thus needs to be included in the evaluation.

A summary of the capital and operating costs is presented in Table 2. In general, the operating costs for fluid beds are lower than for multiple hearths. These costs are competitive with those of other biosolids processing technologies.

Table 2. Thermal Oxidation Processing Costs

Item	Fluid Bed	Multiple Hearth
Capital Cost, $/dry tonne	$175,000-$250,000	$175,000-$250,000
Amortization @ 6% for 20 years	$40-$60	$40-$60
Operating Cost, $/dry tonne		
Labor	$55-$80	$60-$85
Auxiliary Fuel @ $6/MMBtu	$6-$36	$24-$96
Electrical Power @ $.06/kWh	$14-$24	$8-$12
Other	$40-$60	$40-$60
Operating Expenses	$115-$200	$132-$253
Total, $/dry tonne	$155-$260	$172-$313
Bioenergy Recovery Credit	($30)-($50)	($30)-($50)
Net Cost w/ Bioenergy, $/dry tonne	$125-$210	$142-$263

Products

There are numerous potential uses of ash, but few of these have yet been used effectively. Most ash is used as a landfill cover material or monofill, as this is usually the least expensive alternative. Several municipalities have used ash as a source of raw material for cement manufacturing (Duffin Creek WPCP, Ontario) or brick production (Hampton Roads Sanitation District, Virginia and City of Atlanta, Georgia). Others have used ash for its nutrient value as a source of phosphorus (MSD Cincinnati, Ohio).

Perceptions

There are different perceptions of thermal oxidation depending upon the individual point of reference. There are peer perception, regulator perception, and pubic perception.

Peer Perception

Many of our peers do not promote thermal oxidation because they do not view it as a "green" process. "Natural" processes such as composting and land application are preferred because the nutrient value of the biosolids is reused. They dismiss the use of the bioenergy value of the biosolids as not being consistent with recycle/reuse goals.

Others have shown that if all the natural resources are considered, thermal oxidation is a "green" solution (Haug). This brings us to question, what is the value of biosolids? The land application advocates would say it has approximately 5 percent nitrogen, 4 percent phosphorus, and 0.5 percent potassium. In the combustion process, the sewage solids have

a heating value or 10,000–12,000 Btu per pound of volatile solids, and the same mass of phosphorus and potassium remains available in the ash. Most of the nitrogen is driven off in the combustion process. Although the reuse of the ash nutrients has been limited, the nutrients are available. The economics of the value of bioenergy vs. the nutrients will vary widely, but we should all acknowledge that there clearly is value in bioenergy.

Regulator Perception

Our regulators may have a better understanding of thermal oxidation than our peers. They are, however, influenced by our peers as was evident a few years ago. US EPA 503 regulators were concerned that proposed policies may favor thermal oxidation. Subsequently, the regulations required thermal oxidation systems to have a more restrictive exposure limit (by a factor of 10) than other biosolids handling alternatives. More recently, dioxin emissions were supposed to be the “silver bullet” to end thermal oxidation, as the US EPA considered health and environment risks in Round 2 of the US EPA Part 503 regulations. After additional research and testing, US EPA found the dioxin risk to human health very small, and that existing regulations were adequate to protect the environment. No additional regulations were recommended.

Public Perception

There are members of the public who still consider the thermal oxidation as process for creating toxic emissions and wastes. This “black eye” on the process is largely due to the negative press that hazardous waste, medical waste, and municipal waste combustors and coal and oil power generators have had. Our industry’s using the term "thermal oxidation" instead of "incineration" is an attempt to disassociate from those problems in the past and allows us the opportunity to promote the bioenergy value of biosolids.

National Biosolids Partnership

The National Biosolids Partnership (NBP) has promoted thermal oxidation as a viable biosolids handling alternative. The Partnership is currently seeking agencies with thermal oxidation as potential “partners” to be certified by the NBP.

Sustainability

Sustainability incorporates the concept that the economy, environment, and society are interrelated. A solution that addresses only one or two components will not be sustainable over the long term. The concept can be expanded to conclude that problems with any one of the other concept components will cause failure.

Thermal oxidation is often the least expensive biosolids handling alternative for medium and large scale facilities and, therefore, meets the economic criteria. Fluid bed emissions have been shown to be favorable with land application, drying, and composting when transportation emissions are considered. Additionally, the product is pathogen free and inert and suitable for beneficial use and therefore meets the environmental criteria. The social issues are less definitive. Since traffic is a problem in most cities, a reduction in traffic could be considered an improvement in the quality of life that meets the social criteria.

Adopting a thermal oxidation option greatly reduces the truck traffic into plants and along connecting highways.

Next Steps

How is the technology going to change and how should we prepare to meet the new challenges? The following are trends for the technology.

More Stringent Air Emission Regulations

This will cover nitrogen oxides (NOx), particulate matter, especially fine particulate (PM10 and PM2.5), and carbon monoxide (CO). NOx regulations currently range from 4 pounds per dry ton to unregulated. As more units fall under regulation, more utilities will be looking to replace multiple hearths with fluid beds or upgrading emissions from multiple hearths.

Another trend is to regulate PM10 (10 microns and smaller) in addition to total PM (some countries are even investigating PM2.5). Current regulation for PM is 1.3 pounds per dry ton. Air pollution systems may have to be upgraded to comply with more restrictive PM10 and potential PM2.5 regulations. New regulations are likely to reduce total particulate limits to as low as 30 percent of the current limit.

The US EPA Part 503 regulations allow agencies to monitor total hydrocarbons (THC) or CO. It is expected that more and more permits may contain CO limits which are more stringent and would likely require an afterburner or regenerative thermal oxidizer for multiple hearths.

Integration of Biosolids Processes

Another trend is the coupling pairing of biosolids handling options for mutual benefit. One example is the pairing of anaerobic digesters with thermal drying. Digester gas would be used as a fuel for the energy intensive thermal dryers. Thermal oxidation can be paired with dryers as well. In Montreal (Quebec), exhaust gas from a multiple hearth is used as heat source for hot recirculation gas in a direct type dryer. The dried product is sold to a commercial fertilizer manufacturer. Many others have used waste heat boilers for energy production or in combination with thermal conditioning systems or thermal dewatering systems to produce an autogenous or near autogenous operation.

The European trend is to use the available bioenergy in biosolids as a fuel source in dedicated power generation facilities. Most power generation stations in North America have not shown interest, in part, because of their perceptions of biosolids and fears of additional regulations.

References

National Biosolids Partnership, *National Manual of Good Practice for Biosolids, Interim Final Draft 3-13-01*, www.biosolids.org.

Heitz, M. W, et. al., Incineration - The Green Alternative?, *Water Environment Federation, 10th Annual Residuals & Management Conference*, Denver Colorado, August, 1996.

Haug, R.T., Biosolids Combustion - A Case for Reuse, *Proceedings WEF 16th Annual Residuals and Biosolids Management Conference*, Austin, Texas, March, 2002.

WEF Manual of Practice No. 8, *Design of Municipal Wastewater Treatment Plants*, WEF and ASCE, 1992.